UNCONTROLLED DOCUMENTS IF PRINTED; CONTROLLED DOCUMENT LOCATED IN IQMS DOCUMENT CONTROL

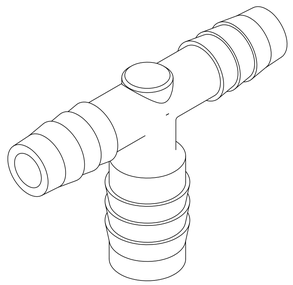

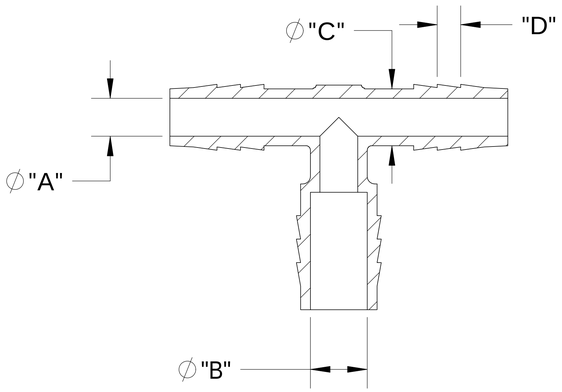

SECTION A-A

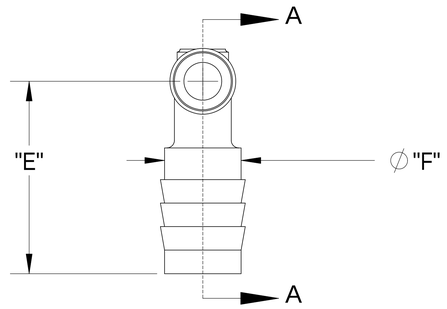

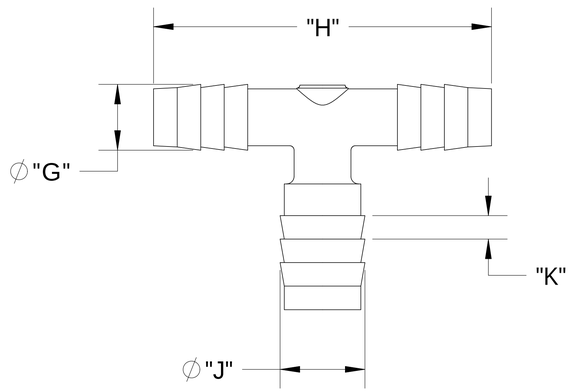

	CATALOG NO.	DESCRIPTION	MATERIAL	DIM "A"	DIM "B"	DIM "C"	DIM "D"	DIM "E"	DIM "F"	DIM "G"	DIM "H"	DIM "J"	DIM "K"
	TT9866/PP	1/2 X 3/8 X 3/8 PP	POLYPROPYLENE	.245	.370	.370	.155	1.26	.495	.430	2.21	.550	.155
	TT9866/P	1/2 X 3/8 X 3/8 P	POLYETHYLENE	.245	.365	.375	.140	1.24	.500	.430	2.17	.550	.140
SHOWN	TT9866/N	1/2 X 3/8 X 3/8 N	NYLON	.250	.375	.375	.155	1.27	.505	.435	2.23	.560	.155

NOTES:

1) POLYPROPYLENE HAS COLOR OPTIONS:
   BLACK = TT9866/ PPB
   NATURAL = TT9866/PPN

PROPRIETARY AND CONFIDENTIAL

THE INFORMATION CONTAINED IN THIS DRAWING IS THE SOLE PROPERTY OF THOGUS PRODUCTS COMPANY. ANY REPRODUCTION IN PART OR AS A WHOLE WITHOUT THE WRITTEN PERMISSION OF THOGUS PRODUCTS COMPANY IS PROHIBITED.

REV	WRO#	DESCRIPTION
D	95.00053	CONVERTED TO 3D FORMAT

HISTORY

UNLESS OTHERWISE SPECIFIED:
DIMENSIONS ARE IN INCHES
TOLERANCES:
ANGULAR: ±0.5°
X.X = ± 0.1
X.XX = ± 0.05
X.XXX = ± 0.015
REMOVE ALL SHARP EDGES AND BURRS
BLEND ALL RADII TO 0.01IN
INTERPRET GEOMETRIC TOLERANCING PER: ANSI Y 14.5 1994
MATERIAL: PP, P, N
FINISH: NA
THIRD ANGLE PROJECTION:

	NAME	DATE
DRAWN	KDJ	12/21/10
CHECKED	KDJ	12/21/10
ENG APPR.		XX/XX/XX
MFG APPR.		XX/XX/XX
Q.A.		XX/XX/XX

COMMENTS:

DO NOT SCALE DRAWING

Thogus You think it, we can make it...
33490 PIN OAK, AVON LAKE, OH 44012

TITLE: 1/2 BARB X 3/8 BARB X 3/8 BARB TEE

SIZE B | DWG. NO. TT9866 | REV D

SCALE: 1:1 | MASS: | SHEET 1 OF 1