REVISIONS			
REV	DESCRIPTION	DATE	APPROVED
A	REDRAWN & RELEASED	2/98	2/98
B	LEAD BARB	7/99	7/99
C	.545 to .550 .550 to .554 1.11 to 1.26	7/99	7/99

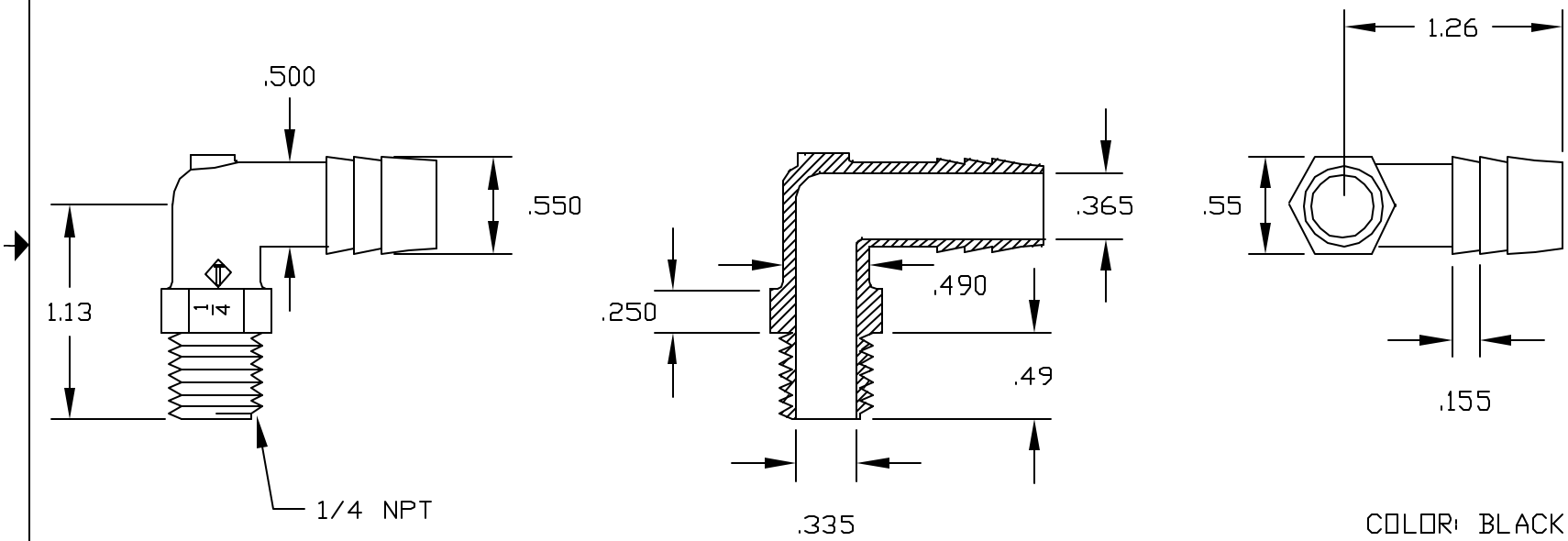

COLOR: BLACK (PPB)

NATURAL (PPN)

UNLESS OTHERWISE SPECIFIED DIMENSIONS ARE IN INCHES
TOLERANCES
DECIMALS .XX +/-.05 .XXX +/-.015
ANGULAR +/-0.5

CONFIDENTIAL

THIS PRINT AND THE SPECIFICATIONS ARE THE PROPERTY OF THOGUS PRODUCTS COMPANY AND HAVE BEEN ISSUED WITH THE UNDERSTANDING THAT IT WILL NOT BE REPRODUCED, REVEALED TO OR USED FOR THE MANUFACTURE FOR OTHERS AND WILL BE RETURNED UPON REQUEST.

DRAWN MS DATE 2/98

CHECKED DATE 2/98

MATERIAL POLYPROPYLENE

Part Name: 1/4 NPT X 1/2 BARB ELBOW

THOGUS PRODUCTS 33490 PIN OAK PARKWAY AVON LAKE OHIO 44012

Part Number TE2048/PP REV C

SCALE 1:1 SHEET 1 OF 1

CONTROLLED DOCUMENT
ONLY IF IN RED