P/N: 8086

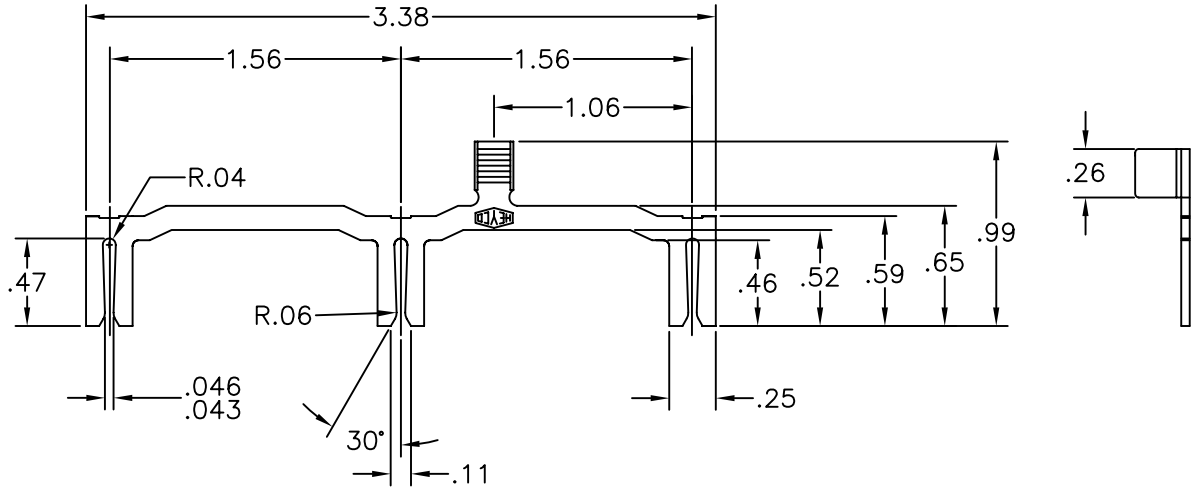

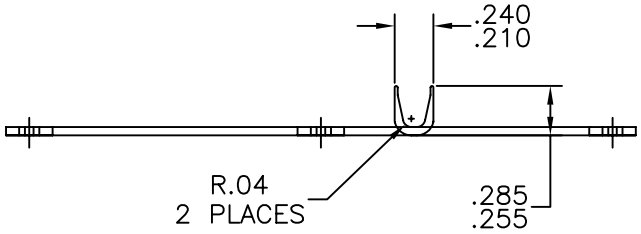

HEYCO PRODUCTS, INC.
TOMS RIVER, NEW JERSEY
(732) 286-1800 FAX (732) 244-8843

PART DRAWING

TOLERANCES +/-: .XX=.01 .XXX=.005 ANG.=2°

MATL.: BRASS	FINISH:
THICK: .045	

TOOLING:

WIRE RANGE (AWG): 16-12

DRAWN: SVH DATE: 6/3/92	REVISED: MEG DATE: 07/03/01	APPROVED: DATE:

T-TAP FEMALE BLADE
DESCRIPTION

8086	8086-000	A
PART NUMBER	CATALOG NUMBER	REVISION