5081

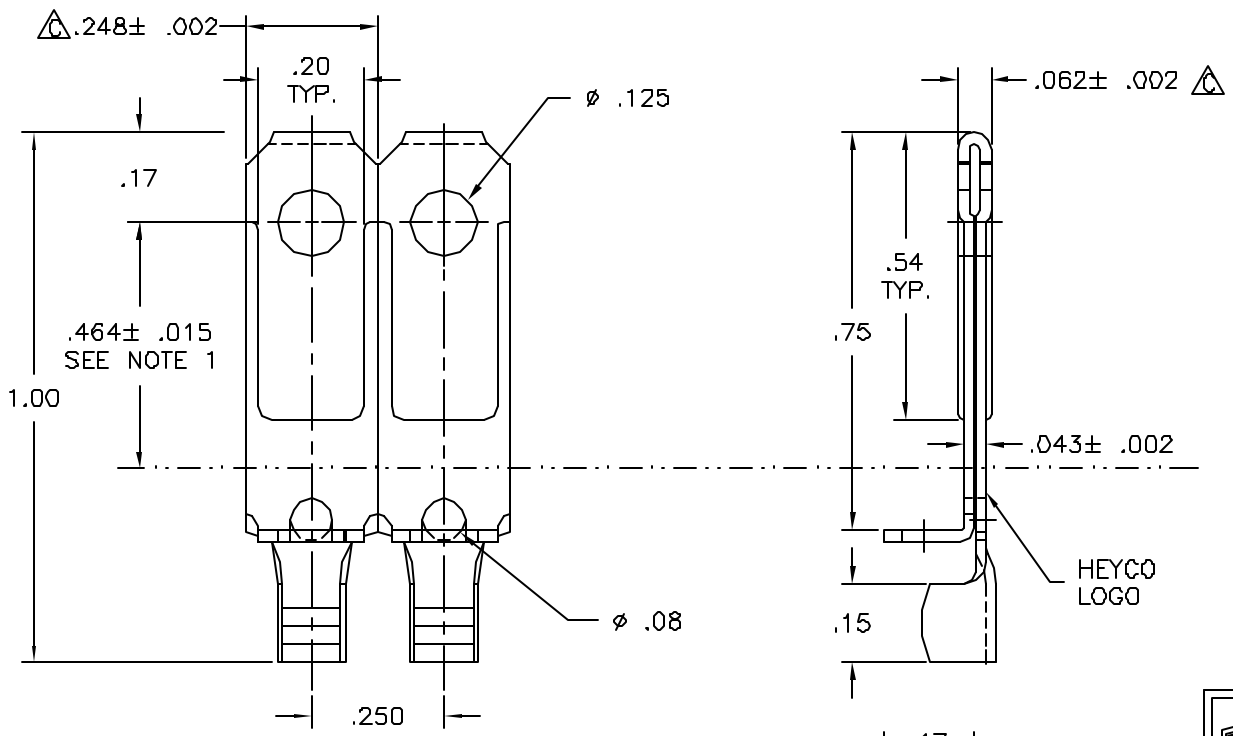

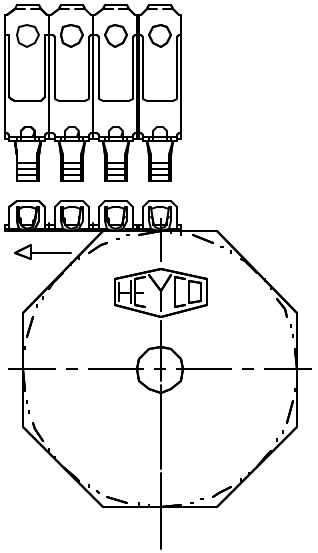

UNWINDING INFORMATION

FEED FROM RIGHT TO LEFT

CRIMP IN FRONT & UPRIGHT

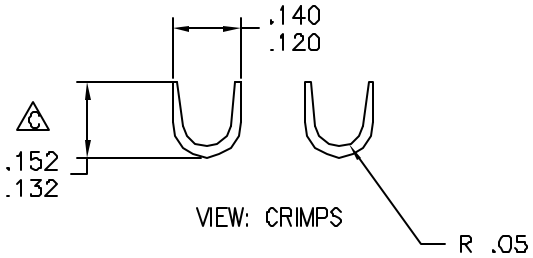

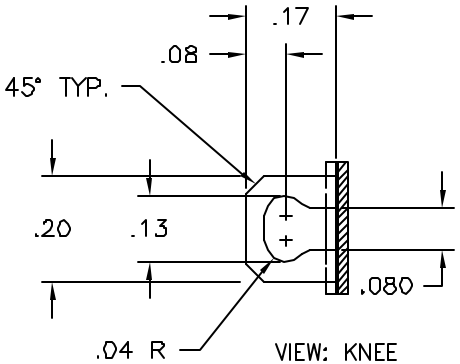

NOTES:

1.) REFER TO UL1681 PAGE 10, FIG. C1.5, AND CLAUSE 4.12.2 IN CSA C22.2 WHICH REFERENCES NEMA WD-16-1988.

2.) CRITICAL DIMENSION TO BE CHECKED AS PART OF THE IN-PROCESS INSPECTION (SPC).

LS-91824

HEYCO PRODUCTS, INC.
TOMS RIVER, NEW JERSEY
(732) 286-1800 FAX (732) 244-8843

PART DRAWING

TOLERANCES +/-: .XX=.01 .XXX=.005 ANG.=2°	
MATL.: BRASS	FINISH:
THICK: .021	WIRE STRIP LENGTH: .21
WIRE RANGE (AWG): 18-14	
TOOLING: UNIV. DIE-A001, PUNCH-C236, ANVIL-C254 /DIE BASE-0629, PUNCHES-0C73(18), 0K18(16-14), ANVILS-0DA9	

DRAWN: M.S.	REVISED: MEG	APPROVED:
DATE: 09/26/91	DATE: 05/28/01	DATE:

112-8-W/ANGLED TIP-R/L
DESCRIPTION

5081	5080-002	G
PART NUMBER	CATALOG NUMBER	REVISION