Description

The DZPANTU-020B080 digital servo drive is designed to drive brushed and brushless servomotors from a compact form factor ideal for embedded applications. This fully digital drive operates in torque, velocity, or position mode and employs Space Vector Modulation (SVM), which results in higher bus voltage utilization and reduced heat dissipation compared to traditional PWM. The drive can be configured for a variety of external command signals. Commands can also be configured using the drive's built-in Motion Engine, an internal motion controller used with distributed motion applications. In addition to motor control, this drive features dedicated and programmable digital and analog inputs and outputs to enhance interfacing with external controllers and devices.

DZPANTU-020B080 drives feature an Ethernet interface for network communication using Ethernet POWERLINK, Modbus TCP or Ethernet, and USB connectivity for drive commissioning using DriveWare® 7, available for download at www.a-m-c.com.

All drive and motor parameters are stored in non-volatile memory. The DZPANTU Series Hardware Installation Manual is available for download at www.a-m-c.com.

Power Range

Peak Current	20 A (14.1 A_{RMS})
Continuous Current	10 A (10 A_{RMS})
Supply Voltage	18 - 80 VDC

Features

- Four Quadrant Regenerative Operation
- Fully Digital State-of-the-art Design
- Programmable Gain Settings
- Fully Configurable Current, Voltage, Velocity and Position Limits
- PIDF Velocity Loop
- PID + FF Position Loop
- Compact Size, High Power Density
- 12-bit Analog to Digital Hardware
- On-the-Fly Mode Switching
- On-the-Fly Gain Set Switching
- Space Vector Modulation (SVM) Technology
- Dedicated Safe Torque Off (STO) Inputs

MODES OF OPERATION
- Current
- Velocity
- Position

COMMAND SOURCE
- ±10 V Analog
- Encoder Following
- Over the Network
- Sequencing
- Indexing
- Jogging

COMPLIANCES & AGENCY APPROVALS
- UL
- cUL
- CE Class A (LVD)
- CE Class A (EMC)
- TÜV Rheinland® (STO)
- RoHS II

FEEDBACK SUPPORTED (FIRMWARE DEPENDENT)
- Halls
- Incremental Encoder
- Auxiliary Incremental Encoder
- 1Vp-p Sine/Cosine Encoder
- Absolute Encoder (EnDat® 2.1/2.2, Hiperface®, or BiSS C-Mode)
- ±10 VDC Position
- Tachometer (±10 VDC)

INPUTS/OUTPUTS
- 1 Programmable Analog Input (12-bit Resolution)
- 5 Programmable Digital Inputs (Differential)
- 3 Programmable Digital Inputs (Single-Ended)
- 5 Programmable Digital Outputs (Single-Ended)
- 3 High Speed Captures

BLOCK DIAGRAM

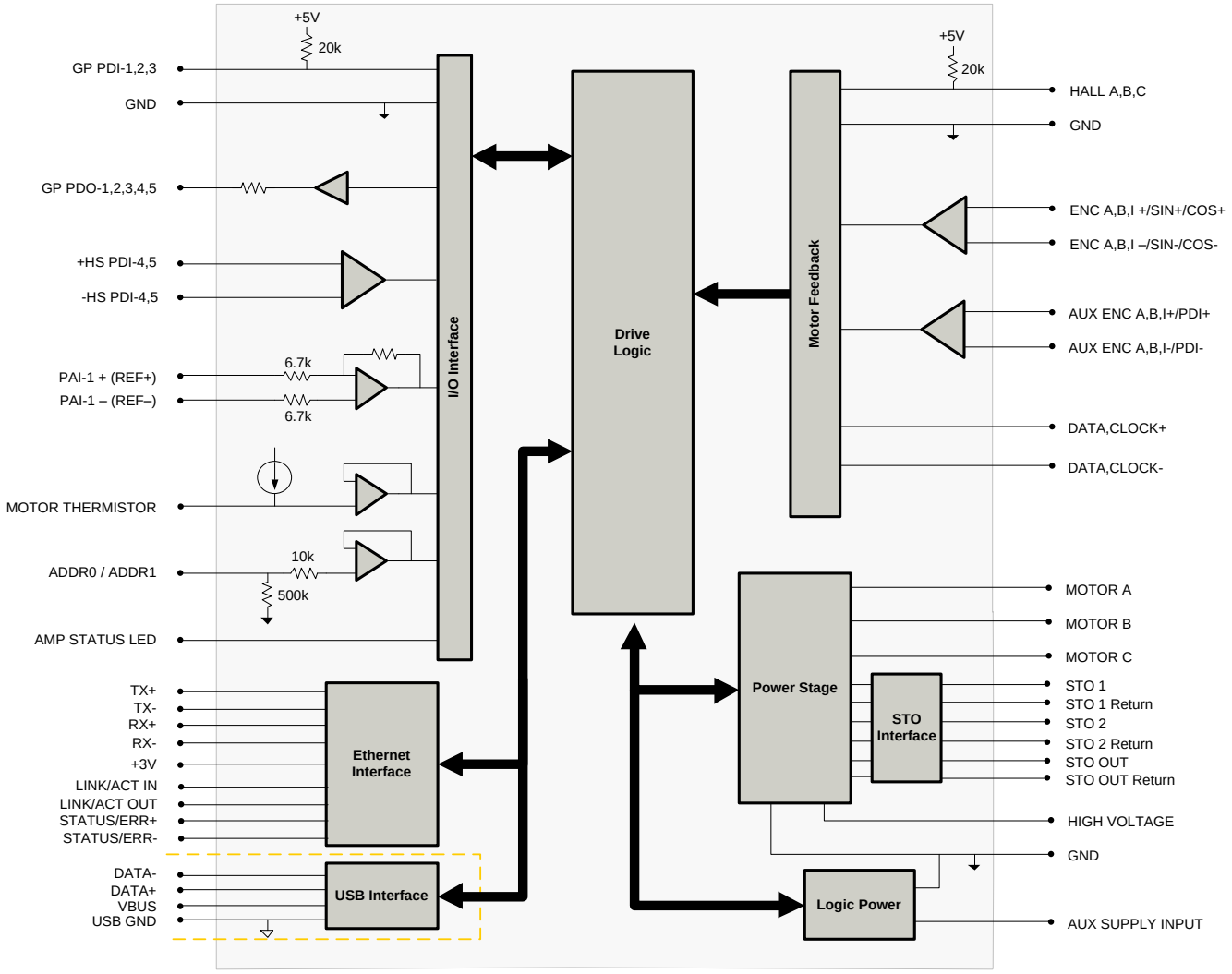

Information on Approvals and Compliances	
c UL us	US and Canadian safety compliance with UL 508c, the industrial standard for power conversion electronics. UL registered under file number E140173. Note that machine components compliant with UL are considered UL registered as opposed to UL listed as would be the case for commercial products.
CE	Compliant with European EMC Directive 2004/108/EC on Electromagnetic Compatibility (specifically EN 61000-6-4:2007 for Emissions, Class A and EN 61000-6-2:2005 for Immunity, Performance Criteria A). LVD requirements of Directive 2006/95/EC (specifically, EN 60204-1:2004, a Low Voltage Directive to protect users from electrical shock).
RoHS II Compliant	The RoHS II Directive 2011/65/EU restricts the use of certain substances including lead, mercury, cadmium, hexavalent chromium and halogenated flame retardants PBB and PBDE in electronic equipment.
Functional Safety Type Approved TÜVRheinland CERTIFIED www.tuv.com ID 0600000000	Functional Safety STO is TÜV Rheinland® certified and meets requirements of the following standards: • EN ISO 13849-1 Category 4 / PL e • EN IEC 61800-5-2 STO (SIL 3) • EN62061 SIL CL3 • IEC 61508 SIL 3

SPECIFICATIONS

Power Specifications		
Description	Units	Value
DC Supply Voltage Range	VDC	18 - 80
DC Bus Over Voltage Limit	VDC	89
DC Bus Under Voltage Limit	VDC	16
Logic Supply Voltage	VDC	18 - 80
Safe Torque Off Voltage (Nominal)	VDC	5 (operating active range, 2.5V to 15V)
Maximum Peak Output Current[1]	A (Arms)	20 (14.1)
Maximum Continuous Output Current[2]	A (Arms)	10 (10)
Maximum Continuous Output Power	W	760
Maximum Power Dissipation at Continuous Current	W	40
Internal Bus Capacitance[3]	µF	33
Minimum Load Inductance (Line-To-Line)[4]	µH	250 (at 80 V supply); 150 (at 48 V supply); 75 (at 24 V supply); 40 (at 12 V supply)
Switching Frequency	kHz	20
Maximum Output PWM Duty Cycle	%	85
Control Specifications		
Description	Units	Value
Communication Interfaces	-	Ethernet POWERLINK / Modbus TCP / Ethernet (USB for Configuration)
Command Sources	-	±10 V Analog, Encoder Following, Over the Network, Sequencing, Indexing, Jogging
Feedback Supported (Firmware Dependent)	-	Auxiliary Incremental Encoder, Halls, Incremental Encoder, 1Vp-p Sine/Cosine Encoder, Absolute Encoder (EnDat® 2.1/2.2, Hiperface®, or BiSS C-Mode), ±10 VDC Position, Tachometer (±10 VDC)
Commutation Methods	-	Sinusoidal, Trapezoidal
Modes of Operation	-	Current, Velocity, Position
Motors Supported	-	Closed Loop Vector, Single Phase (Brushed, Voice Coil, Inductive Load), Three Phase (Brushless)
Hardware Protection	-	40+ Configurable Functions, Over Current, Over Temperature (Drive & Motor), Over Voltage, Short Circuit (Phase-Phase & Phase-Ground), Under Voltage
Programmable Digital Inputs/Outputs (PDIs/PDOs)	-	8/5
Programmable Analog Inputs/Outputs (PAIs/PAOs)	-	1/0
Primary I/O Logic Level	-	5V TTL
Current Loop Sample Time	µs	50
Velocity Loop Sample Time	µs	100
Position Loop Sample Time	µs	100
Maximum Encoder Frequency	MHz	20 (5 pre-quadrature)
Mechanical Specifications		
Description	Units	Value
Agency Approvals	-	CE Class A (EMC), CE Class A (LVD), cUL, TÜV Rheinland® (STO), RoHS II, UL
Size (H x W x D)	mm (in)	88.9 x 63.5 x 20.1 (3.5 x 2.5 x 0.8)
Weight	g (oz)	126.8 (4.47)
Baseplate Operating Temperature Range[5]	°C (°F)	0 - 75 (32 - 167)
Storage Temperature Range	°C (°F)	-20 - 85 (-4 - 185)
Relative Humidity	-	0 - 90% non-condensing
Altitude	m (ft)	0 - 4000 (0 - 13123)
Cooling System	-	Natural Convection
Form Factor	-	PCB Mounted
P1 Connector	-	96-pin, 1.27 mm spaced, dual-row header
P2 Connector	-	58-pin, 2.0 mm spaced, dual-row header

Notes

1. Capable of supplying drive rated peak current for 2 seconds with 10 second foldback to continuous value. Longer times are possible with lower current limits.
2. Continuous A_{rms} value attainable when RMS Charge-Based Limiting is used.
3. Additional 100 µF / 100 V external bus capacitor between High Voltage and Power Ground as close to the drive as possible required.
4. Lower inductance is acceptable for bus voltages well below maximum. Use external inductance to meet requirements.
5. Additional cooling and/or heatsink may be required to achieve rated performance.

PIN FUNCTIONS

P1 - Signal Connector

Pin	Name	Description / Notes	I/O	Pin	Name	Description / Notes	I/O
1	RESERVED	Reserved. Do not connect.	-	2	RESERVED	Reserved. Do not connect.	-
3	PAI-1-	Differential Programmable Analog Input or Reference Signal Input (12-bit Resolution)	I	4	ADDR1	Node Address Selector. See Pin Details below.	I
5	PAI-1+		I	6	ADDR0		I
7	GROUND	Ground	GND	8	GROUND	Ground	GND
9	MOT ENC B- / COS-	Primary Incremental Encoder or Cos Input from feedback device (Absolute or Sin/Cos 1Vp-p). Leave open for BiSS and EnDat 2.2.	I	10	MOT ENC A- / SIN-	Primary Incremental Encoder or Sin Input from feedback device (Absolute or Sin/Cos 1Vp-p). Leave open for BiSS and EnDat 2.2.	I
11	MOT ENC B+ / COS+		I	12	MOT ENC A+ / SIN+		I
13	GROUND	Ground	GND	14	+5V OUT	+5V User Supply	O
15	MOTOR THERMISTOR	Motor Thermistor Input	I	16	GROUND	Ground	GND
17	MOT ENC CLK-	Serial Interface (RS485) for absolute feedback device (BiSS: MA-/+)	I/O	18	MOT ENC_DATA-	Serial Interface (RS485) for absolute feedback device (BiSS: SLO-/+)	I/O
19	MOT ENC CLK+		I/O	20	MOT ENC_DATA+		I/O
21	MOT ENC I-	Differential Incremental Encoder Channel I. Leave open for BiSS and EnDat 2.2.	I	22	AUX ENC B-	Auxiliary Incremental Encoder Channel B or Differential Programmable Digital Input 7	I
23	MOT ENC I+		I	24	AUX ENC B+		I
25	AUX ENC I-	Auxiliary Incremental Encoder Channel I or Differential Programmable Digital Input 8	I	26	AUX ENC A-	Auxiliary Incremental Encoder Channel A or Differential Programmable Digital Input 6	I
27	AUX ENC I+		I	28	AUX ENC A+		I
29	+5V OUT	+5V User Supply	O	30	HALL B	Single-ended Commutation Sensor Inputs	I
31	HALL C	Single-ended Commutation Sensor Inputs	I	32	HALL A		I
33	PDI-5-	Differential Programmable Digital Input (High Speed Capture)	I	34	PDI-4-	Differential Programmable Digital Input (High Speed Capture)	I
35	PDI-5+		I	36	PDI-4+		I
37	GP PDO-5	Programmable Digital Output	O	38	GP PDI-3	Programmable Digital Input (High Speed Capture)	I
39	GP PDO-4	Programmable Digital Output	O	40	GP PDI-2	Programmable Digital Input	I
41	GP PDO-3	Programmable Digital Output	O	42	GP PDI-1	Programmable Digital Input	I
43	GP PDO-2	Programmable Digital Output	O	44	AMP STATUS LED-	AMP Status LED Output for Bi-Color LED. See Pin Details below.	O
45	GP PDO-1	Programmable Digital Output	O	46	AMP STATUS LED+		O
47	RESERVED	Reserved. Do not connect.	-	48	RESERVED	Reserved. Do not connect.	-
49	+5V USB OUT	USB Supply	O	50	DATA- USB	USB Data Channel	I/O
51	GND USB	USB Ground	UGND	52	DATA+ USB		I/O
53	GROUND	Ground	GND	54	GROUND	Ground	GND
55	RESERVED	Reserved. Do not connect.	-	56	RESERVED	Reserved. Do not connect.	-
57			-	58			-
59	GROUND	Ground	GND	60			-
61	RESERVED	Reserved. Do not connect.	-	62			-
63			-	64			-
65			-	66			-
67	GROUND	Ground	GND	68	GROUND	Ground	GND
69	RESERVED	Reserved. Do not connect.	-	70	RESERVED	Reserved. Do not connect.	-
71			-	72			-
73			-	74			-
75			-	76			-
77			-	78			-
79	GROUND	Ground	GND	80	GROUND	Ground	GND
81	TX- OUT	Transmit Line OUT (100 Base TX)	O	82	RX- OUT	Receive Line OUT (100 Base TX)	O
83	TX+ OUT		O	84	RX+ OUT		O
85	+3V OUT	+3V Supply for Transformer/Magnetics Bias	O	86	+3V OUT	+3V Supply for Transformer/Magnetics Bias	O
87	TX- IN	Transmit Line IN (100 Base TX)	I	88	RX- IN	Receive Line IN (100 Base TX)	I
89	TX+ IN		I	90	RX+ IN		I
91	GROUND	Ground	GND	92	GROUND	Ground	GND
93	RESERVED	Reserved. Do not connect.	-	94	LINK/ACT OUT	Link and Activity Indicator for OUT port. Function based on protocol specification. See Pin Details below.	I/O
95	RESERVED		-	96	LINK/ACT IN	Link and Activity Indicator for IN port. Function based on protocol specification. See Pin Details below.	I/O

P2 - Power Connector			
Pin	Name	Description / Notes	I/O
SAFE1	STO OUT RETURN	Safe Torque Off Output Return	STORETO
SAFE2	STO OUTPUT	Safe Torque Off Output	O
SAFE3	STO-2 RETURN	Safe Torque Off 2 Return	STORET2
SAFE4	STO-2	Safe Torque Off – Input 2	I
SAFE5	STO-1 RETURN	Safe Torque Off 1 Return	STORET1
SAFE6	STO-1	Safe Torque Off – Input 1	I
SAFE7	NC	Not Connected	-
SAFE8	NC		-
1	AUX SUPPLY INPUT	Auxiliary Supply Input for Logic backup (Optional)	I
2	AUX SUPPLY INPUT		I
3-10	HIGH VOLTAGE	DC Power Input. Additional 100µF / 100V external bus capacitor required between HV and Ground.	I
11	NC	Not Connected	-
12	NC		-
13-20	GROUND	Ground connection for input power	GND
21	NC	Not Connected	-
22	NC		-
23-30	MOTOR A	Motor Phase A. Current output distributed equally across 8 pins per motor phase, 3A continuous current carrying capacity per pin.	O
31	NC	Not Connected	-
32	NC		-
33-40	MOTOR B	Motor Phase B. Current output distributed equally across 8 pins per motor phase, 3A continuous current carrying capacity per pin.	O
41	NC	Not Connected	-
42	NC		-
43-50	MOTOR C	Motor Phase C. Current output distributed equally across 8 pins per motor phase, 3A continuous current carrying capacity per pin.	O

Pin Details

ADDR0 (P1-6); ADDR1 (P1-4)

ADDR0, as well as *ADDR1*, are used to set the last octet of the IP Address of the drive within the Ethernet network. The value is set by applying a fixed voltage to the *ADDR0* and *ADDR1* pins. *ADDR0* sets the lower 4 bits of the address, and *ADDR1* sets the upper 4 bits of the address. The values for *ADDR0* and *ADDR1* are always integer multiples of 1/5 V within the range 0-3 V. Examples of the voltages required to set certain node ID's are given in the table below. Note that for POWERLINK, the IP address will always by 192.168.100.xxx.

ADDR1 Voltage (Volts)	ADDR1 Value (Hex)	ADDR0 Voltage (Volts)	ADDR0 Value (Hex)	Node ID (Decimal)
0	0	0	0	**Address stored in NVM**
0	0	0.2	1	**001**
0	0	0.4	2	**002**
…	…	…	…	**…**
3	F	2.6	D	**253**
3	F	2.8	E	**254**
3	F	3	F	**255**

AMP STATUS LED+ (P1-46); AMP STATUS LED- (P1-44)

AMP STATUS LED+/- provide power bridge status outputs that can be used with either a single Bi-Directional LED or two Uni-Directional LEDs, depending on the user configuration (reference the DZPANTU Hardware Installation Manual for the recommended wiring diagram, available for download at www.a-m-c.com). Status LED output functionality is as follows:

AMP STATUS LED+/- Functionality	
Drive State	**Pin Output State**
Power Bridge Enabled	AMP STATUS LED- = High; AMP STATUS LED+ = LOW
Power Bridge Disabled (Fault)	AMP STATUS LED + = HIGH; AMP STATUS LED- = LOW
No Power Applied to Drive	AMP STATUS LED +/- = LOW

LINK/ACT IN (P1-96); LINK/ACT OUT (P1-94); STATUS/ERR+/- (P1-93/95)

The *LINK/ACT IN, LINK/ACT OUT,* and *STATUS/ERR* pins serve as Ethernet network indicators. On a standard RJ-45 connector used with Ethernet network topology, the typical Ethernet network indicator LED locations is shown in the below diagram. **Note**

that DZPANTU drives feature signals for connection to LEDs on an RJ-45 connector, but the connector itself is not included on the drive. The MC1XDZPE01 Mounting Card features a built-in RJ-45 connector with LEDs for this purpose.

LED CONFIGURATION

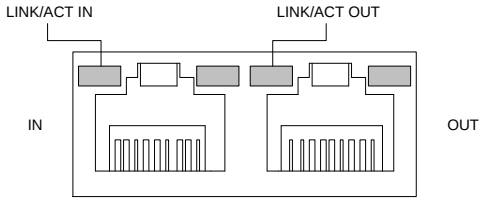

LINK/ACT IN and *LINK/ACT OUT* are used to drive the corresponding LINK IN and LINK OUT LEDs on a typical RJ-45 connector. (reference the DZPANTU Hardware Installation Manual for the recommended wiring diagram, available for download at www.a-m-c.com). The LED Function Protocol tables below describe typical LED functionality.

Communication LEDs Function Protocol

LINK/ACT LEDS	
LED State	**Description**
Green – On	Valid Link - No Activity
Green – Flickering	Valid Link - Network Activity
Off	Invalid Link

Safe Torque Off (STO) Inputs (P2-SAFE1 to P2-SAFE8)

The Safe Torque Off (STO) Inputs are dedicated +5VDC sinking single-ended inputs.

MECHANICAL INFORMATION

P1 - Signal Connector		
Connector Information		96-pin, 1.27mm spaced, dual-row header
Mating Connector	Details	Samtec: CLP-148-02-F-D-BE-A-K (bottom entry); FLE-148-01-G-DV-A-K (top entry)
	Included with Drive	No

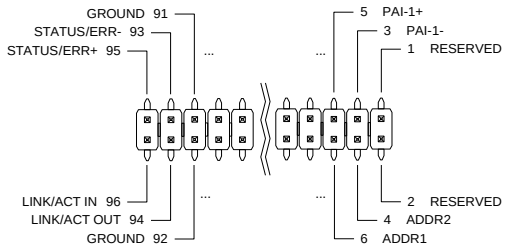

P2 - Power Connector		
Connector Information		58-pin, 2.0mm spaced, dual-row header
Mating Connector	Details	Samtec: CLT-129-02-F-D-BE-A-K (bottom entry); TLE-129-01-G-DV-A-K (top entry)
	Included with Drive	No

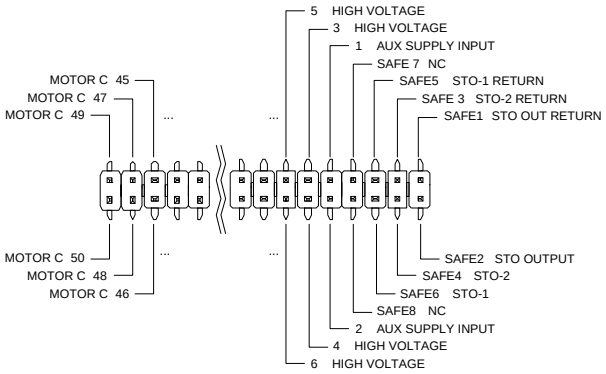

MOUNTING DIMENSIONS

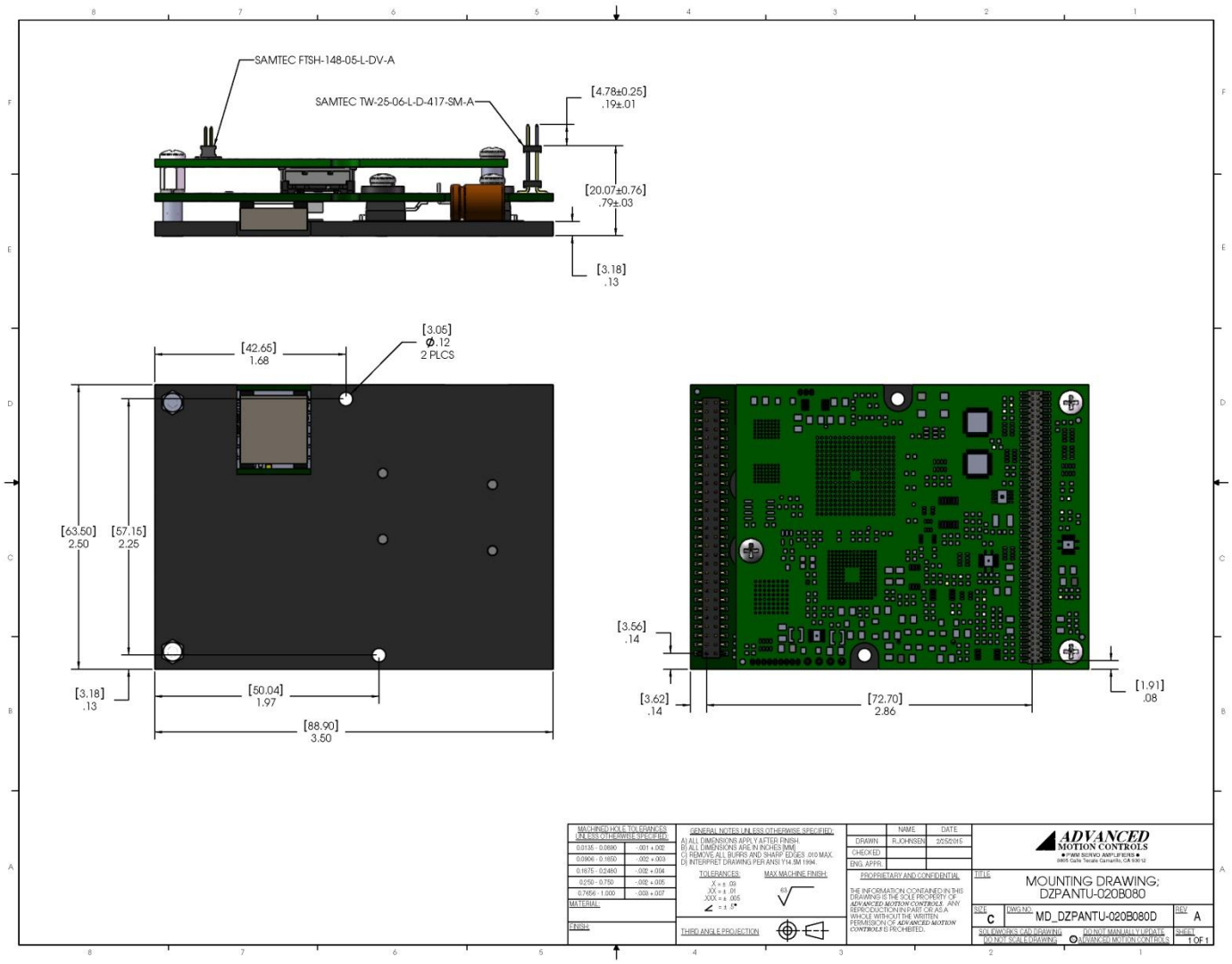

PART NUMBERING INFORMATION

Example: **D Z P A N T U - 0 2 0 B 0 8 0**

Drive Series	
DZ	DigiFlex Z (PCB Mount)

Communication	
C	CANopen
E	EtherCAT
S	EtherCAT Sub-node
P	POWERLINK / Modbus TCP / Ethernet
R	RS485 / Modbus RTU

Command Inputs	
AN	Analog (±10V) No Step & Direction
AL	Analog (±10V) Low Voltage Step & Direction (5V)

Digital I/O	
T	TTL (5V) Non-Isolated

Motor Feedback	
E	Incremental Encoder and/or Halls
U	Universal (Halls, Inc. Enc., Abs. Enc, 1Vp-p Sin/Cos Enc.)

Max DC Bus Voltage (V_{DC})	
080	80
200	175

Power and Logic Supply	
B	DC Input Both Logic Supply Options (Internal or User)
L	DC Input Logic Supply Required

Peak Current ($A_{0\ to\ Peak}$)		
012	12 A	80V Drives
020	20 A	
040	40 A	
060	60 A	
010	10 A	175V Drives
020	20 A	
025	25 A	

DigiFlex® Performance™ series of products are available in many configurations. Note that not all possible part number combinations are offered as standard drives. All models listed in the selection tables of the website are readily available, standard product offerings.

ADVANCED Motion Controls also has the capability to promptly develop and deliver specified products for OEMs with volume requests. Our Applications and Engineering Departments will work closely with your design team through all stages of development in order to provide the best servo drive solution for your system. Equipped with on-site manufacturing for quick-turn customs capabilities, *ADVANCED* Motion Controls utilizes our years of engineering and manufacturing expertise to decrease your costs and time-to-market while increasing system quality and reliability.

Examples of Customized Products

- Optimized Footprint
- Private Label Software
- OEM Specified Connectors
- No Outer Case
- Increased Current Resolution
- Increased Temperature Range
- Custom Control Interface
- Integrated System I/O
- Tailored Project File
- Silkscreen Branding
- Optimized Base Plate
- Increased Current Limits
- Increased Voltage Range
- Conformal Coating
- Multi-Axis Configurations
- Reduced Profile Size and Weight

Feel free to contact Applications Engineering for further information and details.

Available Accessories

ADVANCED Motion Controls offers a variety of accessories designed to facilitate drive integration into a servo system. Visit www.a-m-c.com to see which accessories will assist with your application design and implementation.

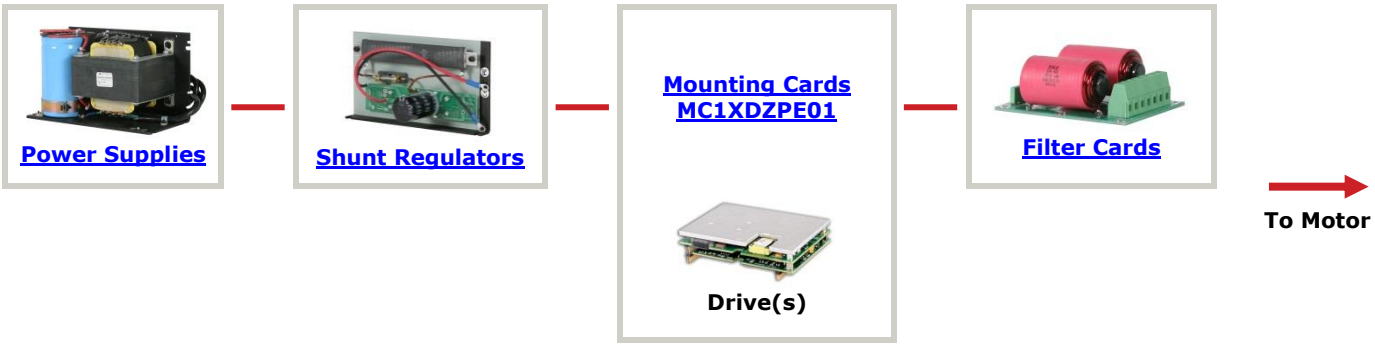

All specifications in this document are subject to change without written notice. Actual product may differ from pictures provided in this document.