GEARBOXES

Inline Spur Gear Reducers

6mm Double or Single Shaft, 0.8 – 2.95 Nm ***1:1 - 64:1***

e-cad Drawings Available

J65
XJ65

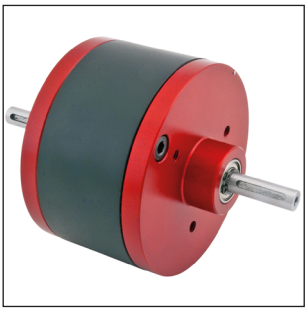

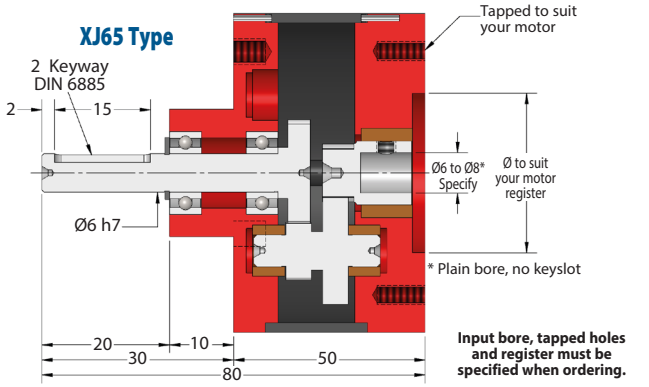

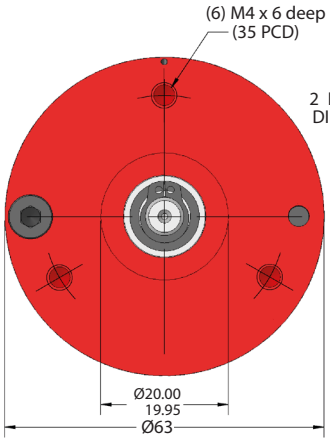

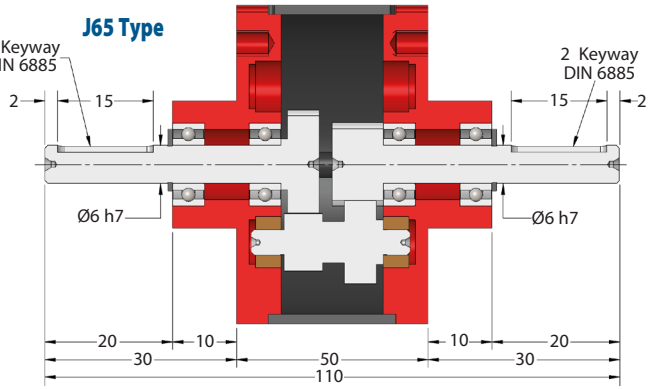

Part Number		Ratio	Efficiency at 1000 Rpm	Nm Output at 1000 Rpm	Standard Direction
J65-15	**XJ65-15**	15:1	88%	1.15	Opposite
J65-20	**XJ65-20**	20:1	88%	1.10	Opposite
J65-24	**XJ65-24**	24:1	88%	1.16	Opposite
J65-32	**XJ65-32**	32:1	88%	1.20	Opposite
J65-40	**XJ65-40**	40:1	88%	1.16	Opposite
J65-48	**XJ65-48**	48:1	88%	1.90	Opposite
J65-64	**XJ65-64**	64:1	88%	1.23	Opposite
J65-SP	**XJ65-SP**	1:1 - 64:1	Special Ratios : Replace **SP** with required ratio		

J65 Weight: 0.32 kg.
Backlash: Depends on ratio.
Max. Input Speed: 4,000 Rpm.
Greased for Life: Shell Gadus S5 V42P 2.5.
Max. Overhung and Thrust Loads at 1000 Rpm:
Output Overhung Load (F_{xa}) = 5 kg. Output Thrust Load (F_a) = 5 kg.

Shaft Keys: KK2-14.

Testing in your application is necessary.
You will need to assess duty cycles and confirm gearbox suitability with your own calculations.
All figures listed are to be used for guidance only.

Output Torque Nm

Rpm Input	Reduction Ratio						
	15:1	**20:1**	**24:1**	**32:1**	**40:1**	**48:1**	**64:1**
4000	0.80	0.81	0.91	0.92	0.89	0.91	0.92
2000	0.91	0.93	1.04	1.05	1.03	1.04	1.06
1000	1.15	1.10	1.16	1.20	1.16	1.90	1.23
500	1.20	1.27	1.35	1.41	1.37	1.40	1.45
200	1.40	1.63	1.58	1.63	1.56	1.61	1.63
100	1.48	1.71	1.80	1.85	1.73	1.82	1.87
50	1.86	2.02	1.95	2.00	1.94	1.95	1.96
10	2.20	2.30	2.36	2.45	2.36	2.40	2.95

sales@ondrives.us
www.ondrives.us
516-771-6777
516-771-6444
ondrives .US Corp.