GEARBOXES

Right Angle Helical Reducers

Heavy Duty 0.5 Dia. Bores 20.4 – 177 lbf.in ***1:1 - 40:1***

e-cad Drawings Available

EA40

Testing in your application is necessary.
You will need to assess duty cycles and confirm suitability with your own calculations.
Figures listed are for guidance only.

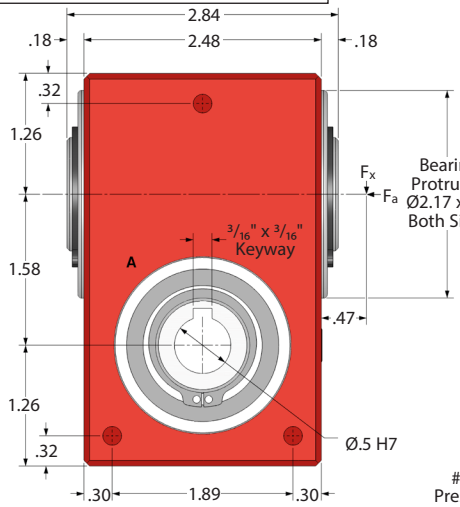

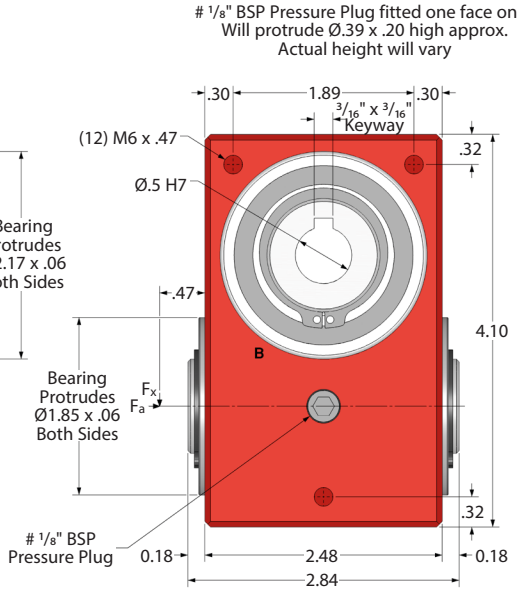

Part Number	Ratio	Type	Input Face	Efficiency at 1000 Rpm	Max Input Speed	Reflected Inertia at Input (lb.in²)	Self Locking Output
EA40-1	1:1	Helical	B	92%	4,000	0.502	✖
EA40-2	2:1	Helical	A	90%	4,000	0.230	✖
EA40-3	3:1	Helical	A	89%	4,000	0.177	✖
EA40-4	4:1	Helical	A	88%	4,000	0.172	✖
EA40-5	5:1	Helical	A	80%	4,000	0.174	✖
EA40-8	8:1	Wormwheel	A	80%	1,500	0.178	✖
EA40-10	10:1	Wormwheel	A	73%	1,500	0.178	✖
EA40-20	20:1	Wormwheel	A	67%	1,500	0.175	✔
EA40-40	40:1	Wormwheel	A	60%	1,500	0.174	✔
EA40-SP	1:1 - 40:1	Special Ratios: Replace **SP** with required ratio					
EA40-SPA	1:1 - 40:1	Low Backlash ≤30': Replace **SP** with required ratio					
EA40-SPLH	1:1 - 40:1	Left Hand Helicals: Replace **SP** with required ratio					

Performance

Weight: 3.68 lb (Approx.).
Standard Backlash: ≈1°. **Low Backlash:** ≤30'.
Greased for Life: Shell Gadus S2 V220AD 2.
LH – Left hand helix reverses output rotation.
Max. Overhung Loads at 1000 Rpm: Overhung Load (F_x) = 88.19 lb.
Max. Thrust Loads at 1000 Rpm: Thrust Load (F_a) = 66.14 lb.
Self Locking Output: Subject to ratio and only applies in static condition.
Amount of locking effect may vary due to manufacturing processes.
Modifications and specials are available. Please contact Technical Sales department.

Output Torque lbf.in

Rpm	Reduction Ratio								
Input	1:1	2:1	3:1	4:1	5:1	8:1	10:1	20:1	40:1
3000	20.4	20.4	20.4	20.4	20.4	-	-	-	-
2000	24.8	24.8	24.8	24.8	24.8	-	-	-	-
1000	33.6	33.6	33.6	33.6	33.6	64.6	70.8	77.9	85.9
500	44.3	44.3	44.3	44.3	44.3	94.7	100.0	108.0	115.9
100	70.8	70.8	70.8	70.8	70.8	125.7	132.8	139.8	147.8
50	79.7	79.7	79.7	79.7	79.7	151.3	153.1	156.7	161.1
10	88.5	88.5	88.5	88.5	88.5	172.6	173.5	175.2	177.0

sales@ondrives.us
www.ondrives.us
516-771-6777
516-771-6444
ondrives .US Corp.